Method of Test for Passing Ability of Self-Consolidating Concrete by J-Ring

1. Scope:

The test is for determining the passing ability of self-consolidating concrete (SCC).

2. Apparatus:

2.1 J-Ring apparatus conforming to AASHTO T 345.

2.2 Slump Cone Mold conforming to AASHTO T 119.

2.3 Base Plate – Base plate of stiff non-absorbing material, at least 32 inches square and marked with both a circle indicating the central location for the slump cone and a concentric circle with a diameter of 20 inches.

2.4 Strike-off Bar - A flat straight bar of steel at least 1/8 in. thick and 3/4 in. wide by 12 in. long.

2.5 Measuring tape capable of measuring to 1/4”.

2.6 Scoop or shovel.

3. Procedure:

3.1 Obtain a sample of fresh concrete in accordance with SD 402. Complete this test within six minutes of starting SD 424.

3.2 Dampen the inside of the mold and the base plate just prior to use.

3.3 Place the base plate on a level, stable surface.

3.4 Place the J-Ring centrally on the base place and the inverted slump cone centrally inside it (Figure 1). Hold the slump cone firmly in place.

23

Figure 1

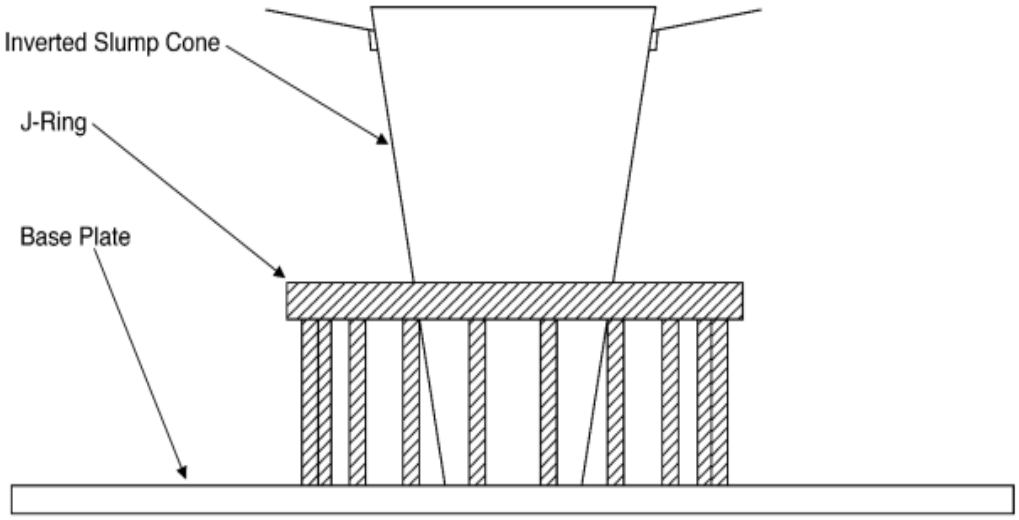

3.5 Using a shovel or hand scoop, fill the mold in one lift without vibrating, rodding, or tamping.

3.6 Use the strike-off bar to strike off the SCC level with the top of cone.

3.7 Remove any concrete from around the base of the cone.

3.8 Raise the cone in a vertical direction 9 in. 3 ± above the base plate with no lateral or torsional motion within 3 ± 1 seconds.

Complete the entire test from the start of the filling through removal of the mold without interruption within an elapsed time of 2 1/2 minutes.

3.9 After the concrete flow has stopped, measure the diameter in two directions, the largest diameter (j_1) and the diameter perpendicular to the largest diameter (j_2), to the nearest ¼". Include any border without coarse aggregate or a bleed water 'halo' in the diameter measurement. The average of the two measurements will be the J-Ring flow.

If the diameter of the two measurements differs by more than 2 inches, the test will be considered invalid and must be repeated.

J-Ring Flow = (j_1 =+ j_2) / 2

3.10 The J-Ring value is the difference between the slump flow (SD 424) and the J-Ring flow.

J-Ring Value = J-Ring Flow – Slump Flow

23

4. Report:

Report the J-Ring Value to the nearest 1/4” on a DOT-23.

5. References:

AASHTO T 119
AASHTO T 345
SD 402
SD 424
DOT-23

23